ISSN 2395-1621

Design of Plastic/Steel Component for Required Life by Experimental and Finite Element Method

#1Sachin Shah, #2Josip Miskic

1sachin1979@sachin1979@gmail.com
2Josip.Miskic@emerson.com

#1Mechanical (Design), Pune University
Rajarshi Shahu College of Engineering, Tathawade
#2Emerson Innovation Centre – Pune
Plot No 23 Rajiv Gandhi InfoTech Park, Hinjewadi, Pune - 411057

ABSTRACT

Plastic and steel component has been analyzed under repeated loading conditions. Design, experimental and finite element approach has been adopted for the same. Different materials have been explored for improving the life of the component and also the efforts on reducing the stress concentration in the design in increase the life of component. An experimental setup is designed in which component under study is subjected to repeated loading with the help of solenoid actuator and the failure of the component observed with respect to no. of cycles. The acceleration plots and speed of the actuator is correlated with the failure behaviour of component under study. The proposed method is very useful for determining the life of component subjected to repeated loaded and very good correlation is establish between the finite element results and the experimental test data.

Keywords— Fatigue failure, Finite element method, plastic parts, repeated loading, steel part

ARTICLE INFO

Article History

Received :18th November 2015

Received in revised form :

19th November 2015

Accepted : 21st November , 2015

Published online :

22nd November 2015

I. INTRODUCTION

The purpose of the present work is to establish the systematic procedure for identifying the failures of the core stop assembly with is operated by solenoid actuator. Here the sequence of failure has been analysed to ensure the life of assembly as per standards and improve the life of the assembly further by taking the corrective actions on the failure modes. Different aspects are analysed such the significant of stress concentration factor on the failure mode and how the life can be improved by changing the design and by reducing the stress concentration. Different materials have been studies for the impact strength and SN curves for selecting the right material for the required life of the components.

H. Nahvi and M. Jabbari [1] have come up with an analytical, as well as experimental approach to the crack detection in cantilever beams by vibration analysis is established. An experimental setup is designed in which a cracked cantilever beam is excited by a hammer and the response is obtained using an accelerometer attached to the beam. Samer Masoud Al-Said [2] has proposed a simple algorithm based on a mathematical model to identify crack location and depth in a stepped cantilever Euler–Bernoulli beam carrying a rigid disk at its tip. The mathematical model that describes the lateral vibration of the beam is derived using the assumed mode method that coalesces with the Lagrange's equation. The proposed identification algorithm utilizes the first three natural frequencies shift of the beam caused by a crack to estimate its location and depth. In addition, the proposed mathematical model is used to illustrate the effect of the crack depth and its location on

the dynamic characteristics of the system. Using the commercial finite element (FE) software (ANSYS 8.0), three-dimensional finite element analysis (FEA) is carried out to show the accuracy of the derived mathematical model and to demonstrate the reliability of the proposed crack identification algorithm. The beam centerline is assumed to have only lateral deformation in the Y direction. The analysis showed consistency with the assumed mode results. It showed that the error in concurrent prediction of crack depth and its location using the proposed algorithm is about 10%. B. P. NANDWANA AND S. K. MAITI [3] proposed a method based on measurement of natural frequencies is presented for detection of the location and size of a crack in a stepped cantilever beam. The crack is represented as a rotational spring and the method involves obtaining plots of its stiffness with crack location for any three natural modes through the characteristic equation. The point of intersection of the three curves gives the crack location. Vibration based methods of detection of a crack offer some advantages. They can help to determine the location and size of a crack from the vibration data collected from a single point on the component. When a crack develops in a component, it leads to a reduction in the stiffness and an increase in its damping. Jesús Toribio, Beatriz González and Juan-Carlos Matos [5] analyzed the influence of microstructure on fatigue crack growth was analyzed in steel with slightly hypereutectoid composition. A material constituted of pearlite colonies and a thin layer of proeutectoid cementite (pearlitic steel) was studied in its initial condition (as received). In addition, the same material was analyzed after undergoing a spheroidization treatment obtained by an isothermal treatment on pearlitic steel at 700ºC and heating time of 10h. Results indicate that fatigue crack propagation curve in the Paris region is not modified by the spheroidization process. Fracto metallographic analysis showed a change in the micro mechanism of fatigue, evolving from transcollonial (trying to break pearlite lamellae) in the pearlitic steel to intergranular in the spheroidized steel, where cracking takes place through the layer of proeutectoid cementite. Spheroidization treatment in pearlite produces fragmentation, spheroidal shape and coalescence in the cementite due to the diffusion processes (Chattopadhyay and Sellars, 1982), and these microstructural changes could influence mechanical properties of pearlite. Spheroidization diminishes yield strength, at the same time increasing ductility and fracture resistance. In this way, in pearlitic and spheroidized steel, tensile strength depends on the mean slip distance in the ferritic phase, according to the Hall-Petch equation. Furthermore, fracture toughness in the pearlitic microstructure increases with the decrease of the prior austenite grain, whereas spheroidized steel does so with the increase of the mean free path between cementite carbides.

II. METHODOLOGY

Below is the core stop is assembly operated by solenoid actuator. Below image shows the different components subjected to fatigue failure due to repeated loading of the solenoid actuator.

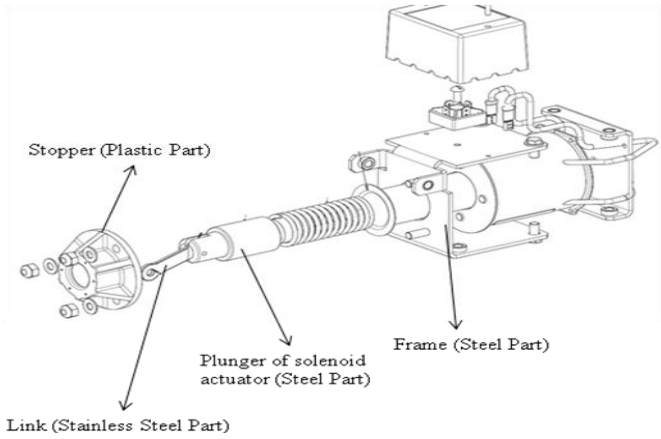

Fig. 1 Exploded view of core stop assembly which is subjected to repeated loading of solenoid actuator

Fig 1 shows the major components of core stop assembly which are subjected to repeated loading condition due to the movement of solenoid plunger. Solenoid force is determined based on the requirement of final product and according design calculations are done. When the solenoid is energized plunger is pulled in and at top dead centre position current is topped to the solenoid coil. Along with the plunger spring is also getting compressed when the solenoid is pulled in and store the energy so at top dead centre position when the solenoid current is stopped, spring will release its energy and will come back to its original position.

This movement of plunger happens at very high speed and the total travel time for the plunger from top dead centre to original position is less than 60ms. This results in very high impact force on the structural components of the core stop assembly shown in Fig.1. High stresses are induced in all the components because of the impact force. As the core stop assembly has to be operated for minimum 15000 operations as per the standard applicable for the product.

There are three different components which are likely to fail under repeated loading shown in Fig.1 Stopper is made up plastic and has to be analysed under the impact load for required number of cycles. Frame is mounted firmly to the structure and undergoes vibration because of repeated loading condition. Link is subjected to tensile stresses in the first half cycle when the plunger is pulled in and then it is subjected to compressive stresses in the next half cycle when spring releases its energy. Fig 2 shows the assembly of link with the rotating mass.

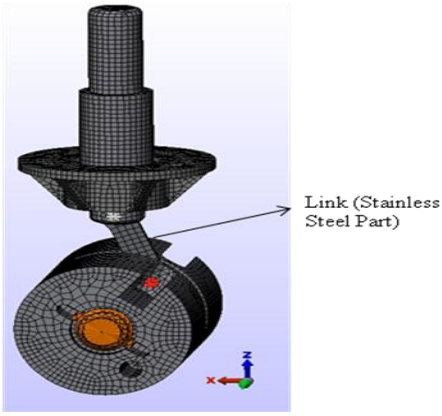

Fig. 2 Assembly of link with the rotating mass

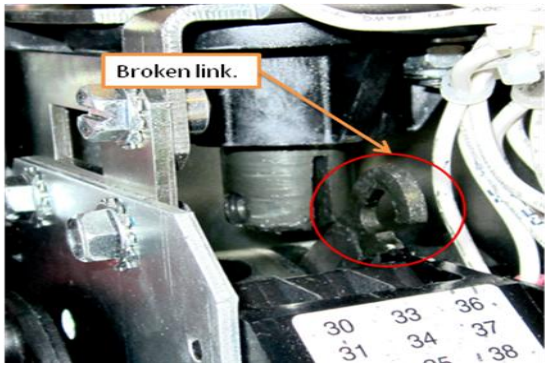

Fig. 3 Link failure after 8634 operations

When the link is subjected to repeated loading conditions it broke after 8,634 operations. Link is analysed for the geometry to improve the life and the material.

First step is to determine the impact force of plunger on the assembly. Impact force is calculated based on the input parameters and the geometry and same is validated on the actual assembly. Theoretical calculations are shown in the below table.

TABLE 1
CALCULATION FOR IMPACT FORCE DUE TO THE MOVEMENT OF PLUNGER IN THE SOLENOID ASSEMBLY

Input			
Parameters	Symbols	Values	Units - IPS
Mass Of 'Weight'	m1	5.0	lb
Mass Of 'Shaft'	m2	2.0	lb
Inertia Of Shaft	I1	0.3	lbf-Inch^2
Inertia Of Wt	I2	5.0	lbf-Inch^2
Angular Velocity	ω	2350.0	Degree/Sec
Angular Velocity	ω	41.1	Rad/Sec
Calculations			
Max Principal Stress	σ	22570.0	psi
Load	F	3350.0	lbf
Deformation	X	0.0202	Inch
Material Stiffness	K = F/X	166006	lbf/Inch
Kinetic Energy	E1=1/2(K*X^2)	33.8	lbf-Inch
Total Moment Of Inertia	I=I1+I2	5.3	lbm-Inch^2
Angular Velocity	ω	6.5	rps
Kinetic Energy	E2=1/2(I*ω^2)	4473.3	lbf-Inch^2-Rev^2 /Sec^2
Total Rotating Mass	M=m1+m2	7.0	lb
Linear Velocity	V	12.7	Inch / Sec
Kinetic Energy	E3=1/2(M*V^2)	563.0	lb-Inch^2/Sec^2
Linear Acceleration	a	211.4	Inch / Sec^2
Radius of Rotation	r	1.9	Inch
	√(kM)	1078.0	
	√(kI)	938.0	
Output			
Parameters	Symbols	Values	Units
Impact Force	F = M * a	1479.7	lbf
FEA KE	E1=1/2(K*X^2)	33.8	lbf-Inch
Angular Kinetic Energy	E2=1/2(I*ω^2)	4473.3	lbf-Inch^2-Rev^2 /Sec^2
Linear Kinetic Energy	E3=1/2(M*V^2)	563.0	lb-Inch^2/Sec^2
Angular Velocity	ω =X*√(K/I)	3.57	
Deformation	X=ω*√(I/K)	0.04	
Impact Force	F= ((V*√(kM) + (ω*√(kI))	3387.00	

FEA model is created in Pro-mechanism to determine the impact force and same is correlated with the theoretical calculations. For determining the impact for on Pro-mechanism position vs time data is used which is measured with the help of transducer which is connected to the plunger of the solenoid.

During the repeated loading link is subjected to tensile as well as compressive stresses which resulted in the failure of link which is analysed and redesigned for the improved life. Different materials are also explored for higher life without the cost impact. Boundary conditions for the link analysis is shown in Fig.4

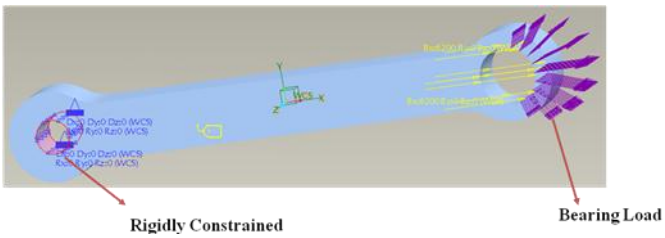

Fig. 4 Boundary condition for link analysis

After 14000 operations there was failure of frame near the tabs which when analysed found the fact the failure occurs because of stress concentration as shown in Fig.5

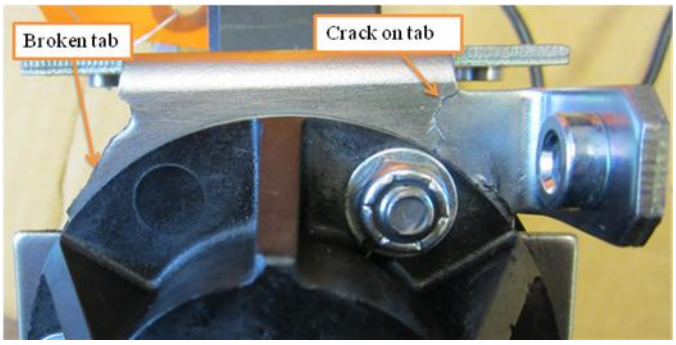

Fig. 5 Failure of frame after 14000 operations

Design changes have been done to reduce the stress concentration and FEA is done to verify the improvement in the design and FEA results are correlated with the testing. Fig 5 shows the existing design of the frame and modified design to reduce the stress concentration.

III. RESUTS AND DISCUSSION

When the core stop assembly undergoes repeated loading condition because of the movement of actuator, failure of different components occurred at different number of operations. Each component is analysed to improve the life by taking appropriate actions

A. Test Set Up

Test set up has been made where in linear variable differential transducer, which is connected to the plunger and the acceleration of the plunger is captured using computer based program. Fig shows the test setup of transducer.

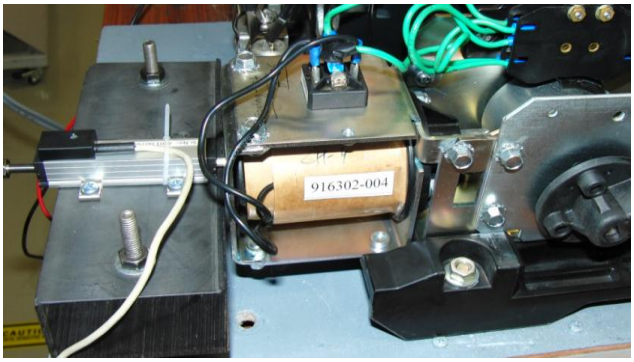

Fig. 6 Test set up to measure the acceleration of plunger with the help of transducer and PC based software

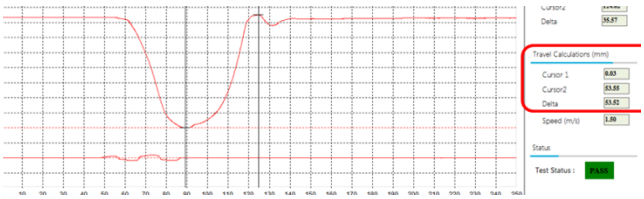

Fig. 7 Acceleration plot of transducer on PC based software

Fig. 7 shows the acceleration plot which is obtained from the PC based software.

B. FEA model to determine impact force

Acceleration data from the PC based software is used to in Pro-mechanism to find out the impact force on the core stop assembly and when position vs time data is entered in Pro-mechanism we got the impact force the assembly. Impact force obtained from Pro-mechanism is compared with the calculated impact force and good correlation is established. Simulation results and theoretical results were matching within 5% variation

Fig. 8(a) and 8(b) shows the FEA model in pro-mechanism for getting the obtaining the impact force.

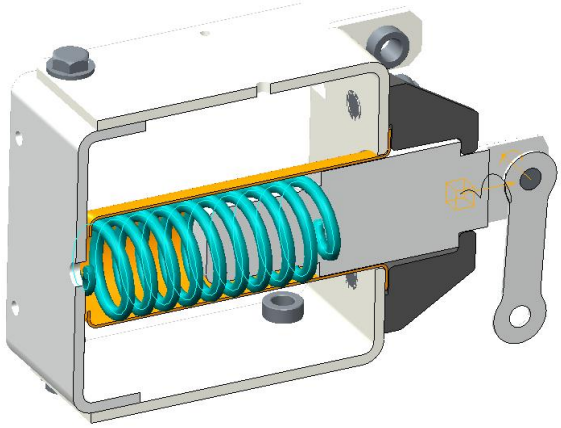

Fig. 8(a) Pro-mechanism model to determine the impact force

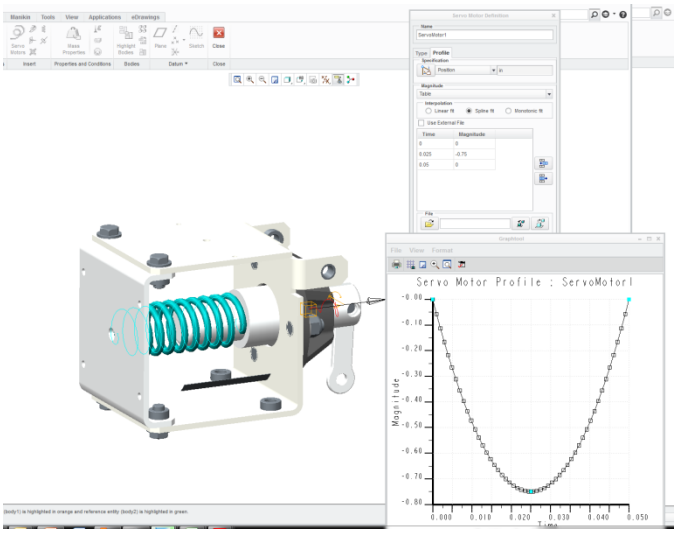

Fig. 8(b) Pro-mechanism model to determine the impact force

This impact force is used further for determining the life of all the components of the core stop assembly. Impact force obtained from the FEA model is 3425Lbf.

C. Frame design

Frame is subjected to the mechanical vibration because of the repeated loading of the conditions on the assembly. It has been observed that the frame developed crack on one side and broke on other side after 14000 operations as shown in Fig. 5. When the component is analysed for root cause of failure it has been evident that at the notches and it happened due to high stress concentration in the localize area. Original design is modified to reduce the stress

concentration effect and came up with two variations as shown in Fig. 9

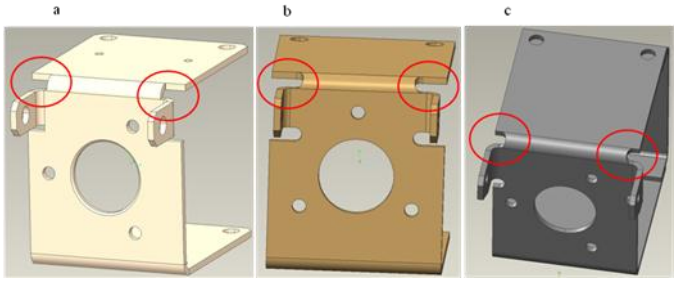

Fig. 9 Design changes in frame to reduce the stress concentration

Fig 9(a) shows the original design which has sharp corners which are changed to rounded corner in Fig 9(b) with the same length of notch. Fig 9(c) shows the reduced notch length with rounded corners. FEA is done on all the three designed to understand the reduction in stresses. The relief provided are as per the sheet metal manufacturing guidelines. Full round in the flat pattern helps in easing out the stresses.

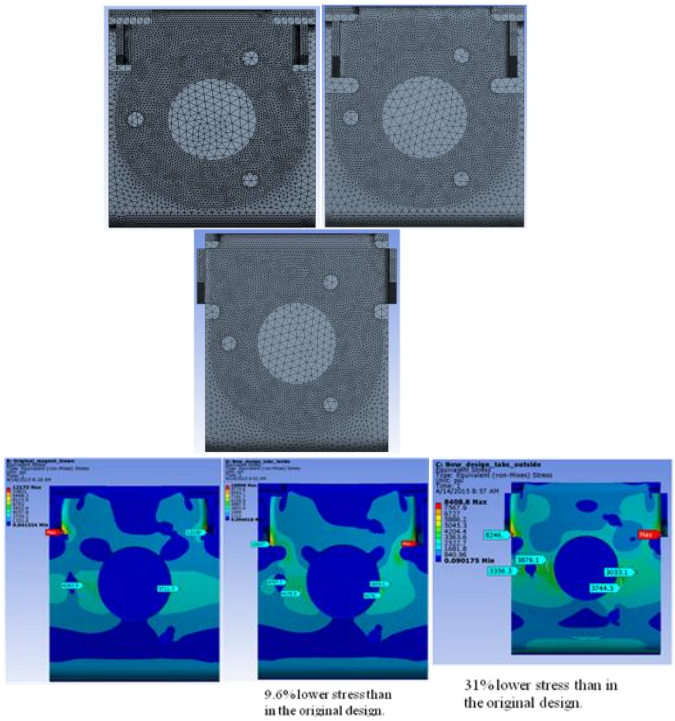

Fig. 10 Simulation results for original frame and modified designs to check the reduction in stresses

Fig 10 shows the simulation model of frame with modified design there it has been observed that the stresses reduce drastically with making the corner rounds. Fig 8(c) design shows 31% reduction in the stresses and hence the life of core stop assembly will be improved significantly.

D. Link Design

Link undergoes the compressive stresses and tensile stresses during one operation as for the first half cycle it is pulling the mass and in the next half cycle it is pushing the weight. Failure of the link is observed after 8634 operations as shown in Fig 3. Failure occurs primarily because the hole is getting bigger and eventually breaking the component. Different geometries are considered for improving the life of the link and also different materials are considered.

1) geometry: Fig 10 shows the different geometry different

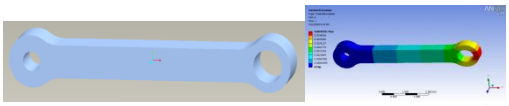

Fig. 11(a) Original link design and simulation results (Fatigue life 8000 operations for bearing load of 320 Lbf)

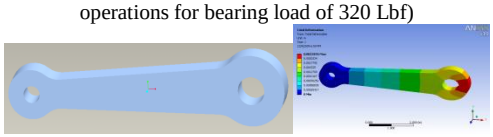

Fig. 11(b) modifed link design and simulation results (Fatigue life 24000 operations for bearing load of 320 Lbf)

Fig 11 shows the original design (a) and modified design (b). For the modified design fatigue life can be increased by 3 times with change geometry. However there could be constrains in the changing the geometry of the component and hence the alternate approach has to be considered as well.

2) Material: different material are explore with FEA simulations has been carried out to compare the strength of material for repeated loading. Table 2 shows the different materials explores with properties the FEA results for improvement in life. Here different types of materials and different grades are also compared. Also the SN curve for the material is referred to determine the life of the component based on the maximum principle stress of material. From the SN curve it can be determined that life of Al7075 is 100times more than that of Aluminium 6065.

TABLE 2
COMPARISON OF DIFFERENT MATERIAL WITH PROPERTIES AND SIMULATION RESULTS

Material Parameters	Unit	Aluminium 6061 T6	Aluminium 7075 T6	Stainless Steel-17-4PH-1075	Stainless Steel-17-4PH-1150
Density	lb/in³	0.0975	0.102	0.283	0.284
Ultimate Tensile Strength	psi	44950	83000	155000	145000
Tensile Yield Strength	psi	40020	73000	135000	125000
Modulus of Elasticity	psi	9990500	104000000	28500000	28500000
MPS @ Load 320 lbf	psi	3319	3319	3287	3287
MPS @ % of Yield	%	83	45	24	26

Deformation @ 320 Load	In	0.00451	0.00433	0.00157	0.00157
Poisson Ratio		0.33	0.33	0.272	0.272

E. Stopper

Stopper has been analysed to ensure that it does not break for at least 20,000 operations. Simulation has been carried to ensure the required life and also material analysis is done for the same. Fig 11 shows the simulation of stopper to ensure it has required strength to sustain more than 20,000 operations. Fig 11 shows the FEA model, set up to determine the stresses under the impact load and determine the life of component.

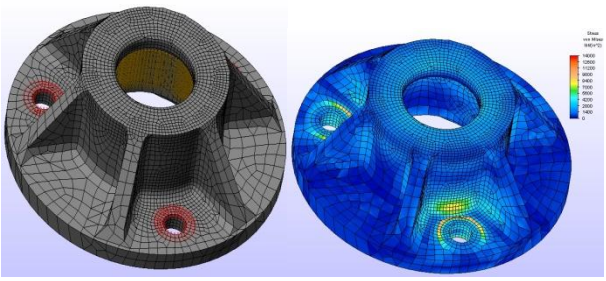

Fig. 13 FEA model of stopper under impact loading condition for determining the life of component

Also different material are explored to increase the life of components as shown in Table 3

TABLE 2
MATERIAL COMPARISON FOR DIFFERENT GRADES OF ZYTEL

Material	Modulus (psi)	Yield Strength (psi)	Impact Strength ft-lb/in
70G33	900,000	18,000	2.5
ST801	125,000	6,000	20

The loading condition is impact load situation, hence super toughened nylon i.e. Zytel ST801 has impact strength that of 8 times of Zytel 70G33.

IV. CONCLUSIONS

A systematic approach of failure mode of different components has been studied. Good correlation in the theoretical calculations and simulation results is achieved for determining the impact load. All the parts of core stop assembly were analysed to ensure the life of minimum 20,000 operations. Experimental set up help in verifying the assembly life and identifying the life of each component. Material plays vital role in determining the life of component and alternate materials are identified to enhance the life along with the design changes. Effect of stress concentration on the fatigue life of the component is studied and rectified by changing the localized area to reduce stress concentration. There has been very good correlation in the calculations, FEA results and test results for determining the impact force and hence the stresses on the component and hence proved that all the components are safe for the life of 20,000 operations for the assembly.

ACKNOWLEDGEMENT

I wish to express my sincere thank to Prof Khan for guidance and encouragement in carrying out project work. My sincere thanks to Mr. Subrahmanyam Jana, Group Program Manager from Emerson Innovation Centre – Pune and Mr. Richard Encelewski, Manager Switch Design for kind cooperation during the execution of project.

REFRENCES

[1] H. Nahvi, M. Jabbari, “Crack detection in beams using experimental modal data and finite element model”, International Journal of Mechanical Sciences 47 (2005) 1477–1497
[2] Samer Masoud Al-Said, “Crack identification in a stepped beam carrying a rigid disk”, Journal of Sound and Vibration 300 (2007) 863–876
[3] B. P. Nandwana and S. K. Maiti, “Detection of the location and size of a crack in stepped cantilever beams based on measurements of natural frequencies”, Journal of Sound and Vibration (1997) 203(3), 435-446
[4] Q.S.Li, “Vibratory characteristics of multi step beam with an arbitrary number of cracks and concentrated masses”, Applied Acoustics 62 (2001) 691-706
[5] Jesús Toribio, Beatriz González and Juan-Carlos Matos, Influence of the microstructure of eutectoid steel on the cycle crack propogation, International Journal of Fracture DOI 10.1007/s10704-011-9633-7.
[6] Farhad B. Bahaideen, “Fatigue Behaviour of Aluminum Alloy at Elevated Temperature”, Modern applied science, Vol 3 No 4
[7] N.A.Alang, N.A.Razak & A.K.Miskam, “Effect of Surface Roughness on Fatigue Life of Notched Carbon Steel”, International Journal of Engineering & Technology IJET-IJENS Vol: 11 No: 01
[8] R.O. RITCHIE, Mechanisms of fatigue-crack propagation in ductile and brittle solids, International Journal of Fracture 100: 55–83, 1999.
[9] C. M. Sharanaprabhu, Shashidhar K. Kudari, Mixed-mode crack initiation direction for elastic-plastic materials, International Journal of Engineering, Science and Technology Vol. 2, No. 11, 2010
[10] Norman E. Dowling, “Mean Stress Effects in Stress-Life and Strain-Life Fatigue”, 2004 Society of Automotive Engineers, Inc

